ISSN 2395-1621

REGENERATIVE BRAKING SYSTEM

[#1]Atharva Wadke, [#2]Darpan Shah, [#3]Siddharth Shirolkar,
[#4]Prof. Sarang Joshi

[1]awadke1110@gmail.com
[2]shahdarpan60@gmail.com
[3]siddharthshirolkar@gmail.com

[#1234]Department of E&TC Engineering,

Pune Vidyarthi Griha's College of Engineering and Technology,
Pune-9

ABSTRACT

As the basic law of Physics says 'energy can neither be created nor destroyed it can only be converted from one form to another'. This project on Regenerative braking refers to a system in which the kinetic energy of the vehicle is stored temporarily during deceleration and is reused as kinetic energy during acceleration or running. Regenerative braking is a small, yet very important step toward our eventual independence from fossil fuels. These allow the batteries to be used for longer periods of time. These type of brakes also extend the range of electric vehicles. In many hybrid vehicles, this system is applied to improve the efficiency of the hybrid vehicles. A normal car bears the wastage of lot of energy in the form of heat created by friction. Regenerative braking contributes in saving though not all but decent amount of energy. In this project we could demonstrate the concept of regenerative braking system on a simpler smaller scale for the better understanding of the students. We were able to regenerate a small amount of energy which could be stored or used for other processes by necessary amplification if required. In real time applications the regenerated energy is comparatively large and is fed back to the car battery which further increases its durability and contributes in increasing the range of the vehicle.

Keywords- Hybrid vehicles, Energy, Regenerative Braking System

ARTICLE INFO

Article History

Received: 14th November 2017

Received in revised form :

14th November 2017

Accepted: 17th November 2017

Published online :

17th November 2017

I. INTRODUCTION

Brakes are employed to stop or retard the motion of any moving body. Thus, in automobiles the brakes are having the most important function to perform. In **conventional braking** system the motion is retarded or stopped by absorbing kinetic energy by friction, by making the contact of the moving body with frictional rubber pad which causes the absorption of kinetic energy, and this wasted in the form of heat in surroundings. Each time we brake the momentum the vehicle has gained is absorbed and to re-accelerate the vehicle we have to start from the scratch to redevelop that momentum by using more power from the engine. Thus, it will ultimately result in huge waste of energy. As the basic law of Physics says 'energy can neither be created nor be destroyed, it can only be converted from one form to another'. It would be good if we could store this energy which is otherwise getting wasted and reuse it next time we need to accelerate. That's the basic concept of **regenerative ("regent") brakes,** which provide braking for the system when needed by converting the available energy to some usable form. These are widely used in electric trains and the latest electric and hybrid cars.

Regenerative brake is an energy recovery mechanism which slows a vehicle by converting its kinetic energy into another form which can be either used immediately or stored until needed. Thus, the generated electricity during the braking is fed back into the supply system (in case of electric trains), whereas in battery electric and hybrid vehicles, the energy is stored in a battery or bank of capacitors for

later use. Energy may also be stored by compressing air or in a rotating flywheel.

II. BASIC IDEA

Electric trains, cars and other electric vehicles are provided by electric motors connected to batteries. When we're driving along, energy flows from the batteries to the motors, turning the wheels and providing us with the kinetic energy we need to move. When we hit the brakes, the whole process goes into reverse; electronic circuits cut the power to the motors. In this case the motors work like generators and start producing electricity instead of consuming it. Power flows from these motor generators to the batteries, charging them up. So a good proportion of the energy we lose by braking is returned to the batteries and can be reused when we start off again. In practice, regenerative brakes take time to slow things down, so most vehicles that use them also have ordinary (friction) brakes working alongside. That's one reason why regenerative brakes don't save 100 percent of braking energy.

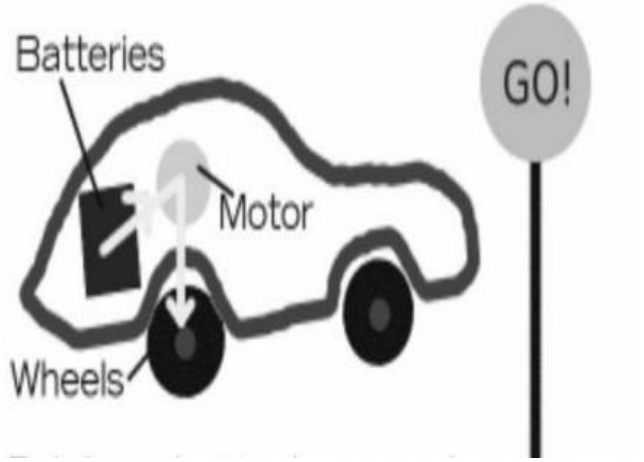

Fig1. Driving-batteries supply energy

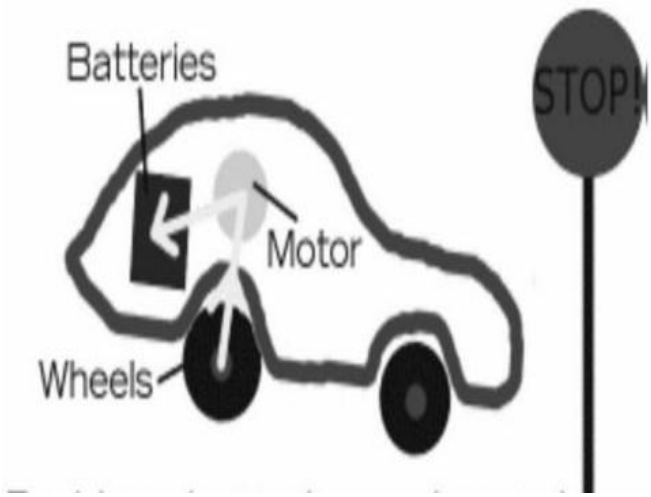

Fig2. Braking- batteries recharged

III. BLOCK DIAGRAM

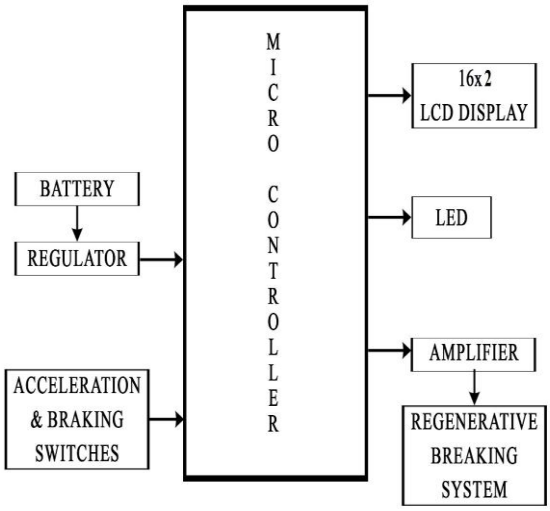

Fig3. Block digram

- Microcontroller – PIC18f4550

We had studied the PIC18f4550 in the earlier semester so we are acquainted with it. Also the development kit required for PIC18f4550 is readily available in our college .We could have used the 20 pin PIC however the cost of it along with its development kit is very high.

- Motor –

The motor we have used in this project is a 12volts motor with 500 rpm. Motor was selected on its availability. Motor with higher specifications could be selected.

- Battery –

We have made use of the battery as power supply to imitate the battery used in electric or hybrid cars. In this project we have made use of an 18volts supply.

- LCD -

The LCD has been used for displaying the acceleration and braking action of the vehicle.

- MOSFET – IRF540

The MOSFET is being used in the chopper circuit as a controlled switch. The MOSFET we needed should have a gate to source voltage of 5volts as that's the output of microcontroller however only IRF540 was found to satisfy those requirements so we used it.

- Potentiometer –

The potentiometer was used to vary the speed of the motor.s

- LED –

We have made use of a red led and a green led for depicting the braking and acceleration of the system respectively.

- Operational amplifier – LM741

This op-amp is used to amplify the signal coming from the microcontroller which is then used to drive the gate. As the gate voltage increases the motor speed increases as well.

- Resistors –

12k ohm and 10k ohm resistors have been used for the amplifier. Two 100 ohm resistors have been used at the gate inputs. Two 1k ohm resistors have been used for LEDs for their protection.

- Capacitors –

The capacitors required by IC 7805 and IC 7812 as specified in their datasheet have been used.

- Connecting wires –

They have been used for the necessary connections.

IV. CIRCUIT DIAGRAM

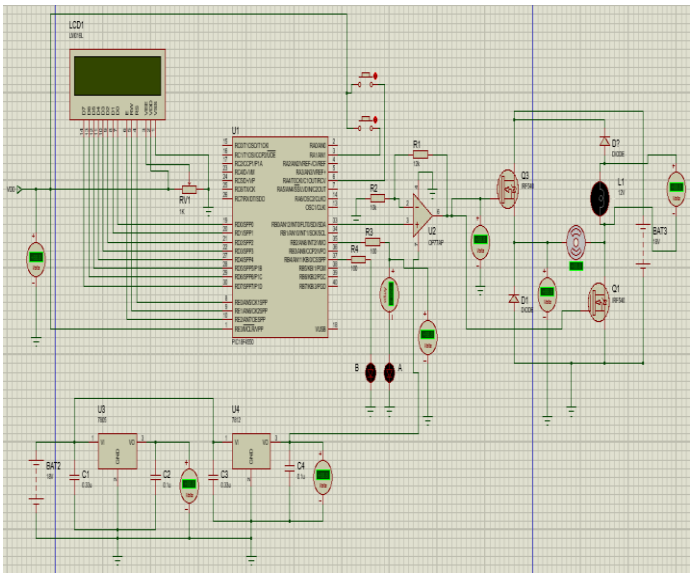

V. RESULT

This project was successful in showing the regenerative braking system.

In this project we were able to glow the bulb which shows that energy which would have been wasted is now used to glow the bulb using the regenerative brakes.

The chopper circuit plays a crucial role here. The Class D chopper circuit has been used here. The concept of regenerative braking system is explained in a simple way.

The energy regenerated could be stored or used immediately.

VI. APPLICATION

Jaipur Metro uses the regenerative braking system and saves 35% of electricity.

Vehicles using regenerative braking system:

- Toyota Prius
- Ford Fusion
- Tesla Roadster
- KERS is used in F1 cars.

TESLA ROADSTER

Through this project Regenerative braking can be understood with the help of electrical and electronics components. There are even other types of regenerative braking which are listed as follows:

- Hydraulic Regenerative Brakes
- Regenerative braking using Nitilon spring.

As designers and engineers perfect regenerative braking systems, they will become more and more common. All vehicles in motion could be benefitted from regenerative braking to recapture energy and avoid its wastage.

VII. CONCLUSION

The phenomenal growth of the human civilization has witnessed a colossal loss in the natural resources. Fossil fuels have been predicted to face extinction in 75 years. Auto makers have noticed this and have been introducing electric and hybrid cars to cope with the loss and to conserve these resources. Regenerative braking though small is an important step in our eventual independence from fossil fuels. This technology has brought us many cars including the Tesla Roadster.

In this project we were able to utilize the regenerated energy on a small scale. However in real time applications the devices and components are of higher specifications and can give a substantial amount of regenerated energy which can be stored in the vehicle's battery. We could achieve our predetermined goal of regenerating energy and thus saving it from being wasted.

REFERENCES

1. How stuffswork.com
2. Juan w. Dixon, Micah Ortuzar, "Regenerative Braking System for Electric cars".
3. Wikipedia.org
4. Scribd.com – Extensive study on Regenerative Braking. (Japanese)
5. Ziqiang Chen, Lin Yang "Intelligent Regenerative Braking Control of Hybrid Buses"
6. Khanchandani – Chopper circuit.
7. Alldatasheets.com – 7805,7812, IRF540.

